PEDESTRIAN RAILING

TYPE T-636

AMG Metals Inc.

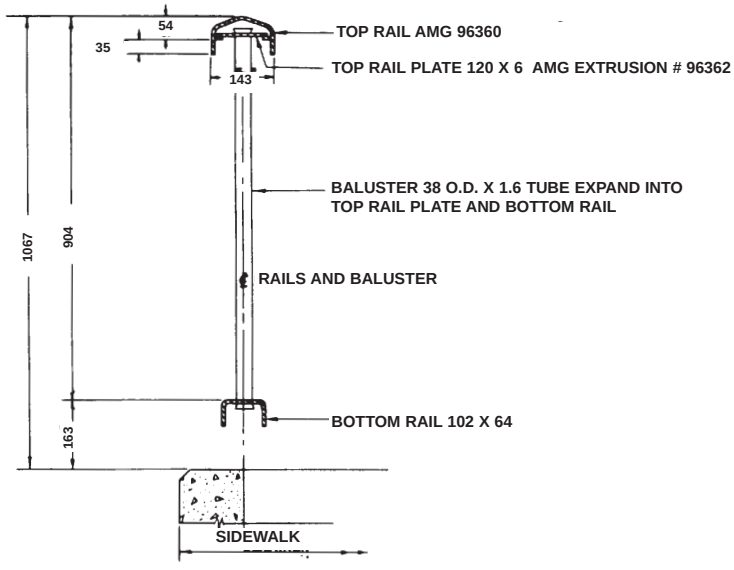

SECTION A-A

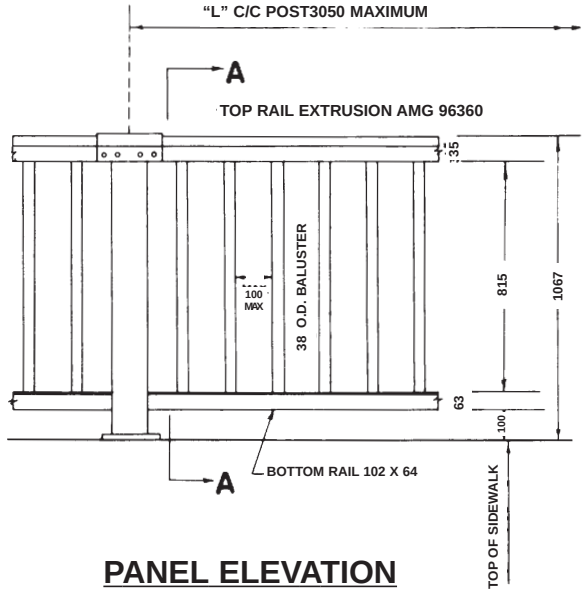

PANEL ELEVATION

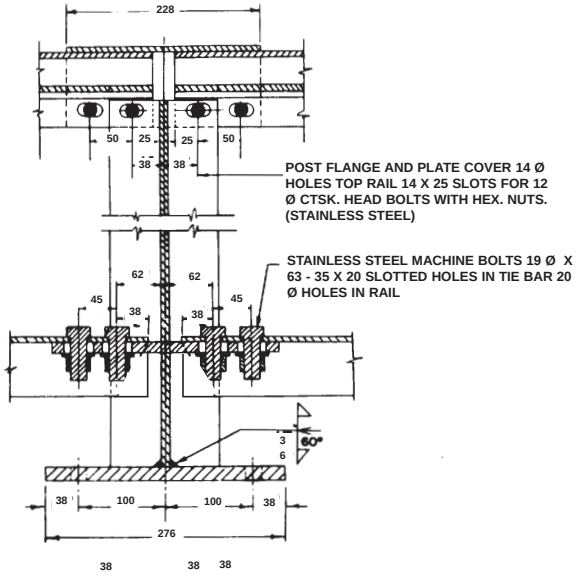

SECTION B-B

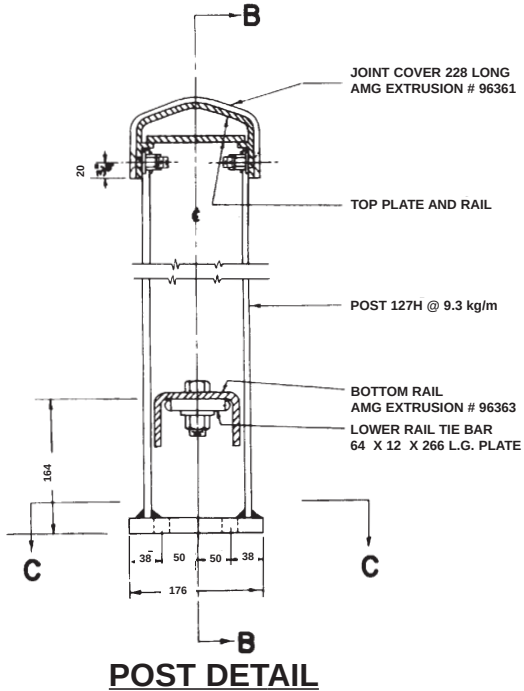
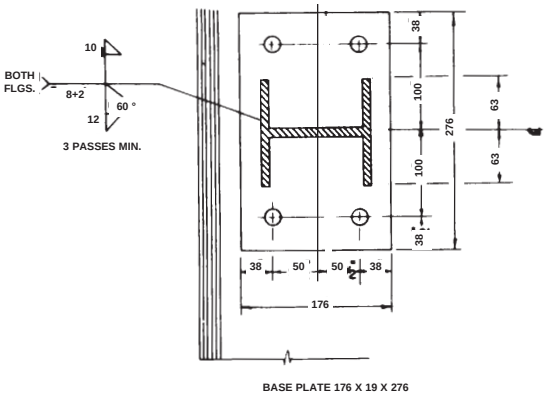
POST DETAIL