PEDESTRIAN RAILING

TYPE 600-A

AMG Metals Inc.

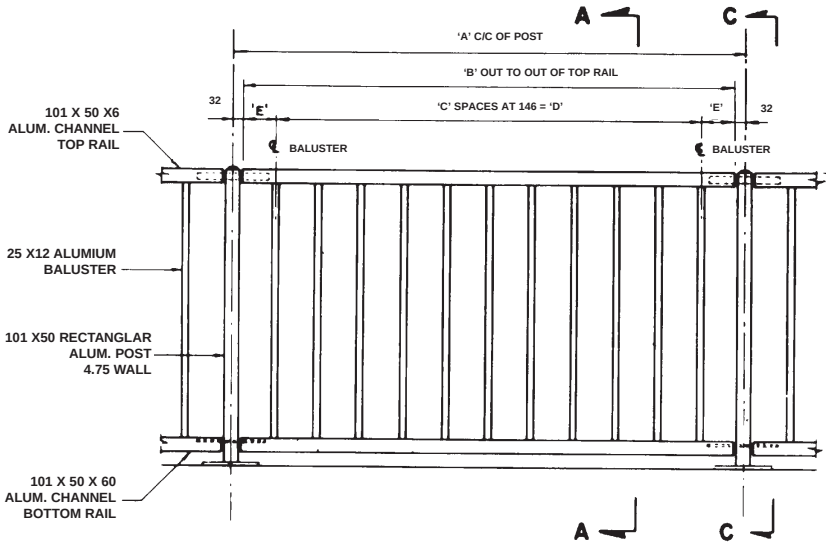

PANEL ELEVATION

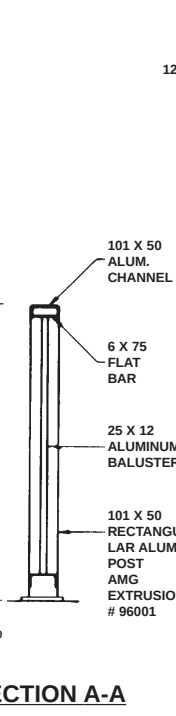

SECTION A-A

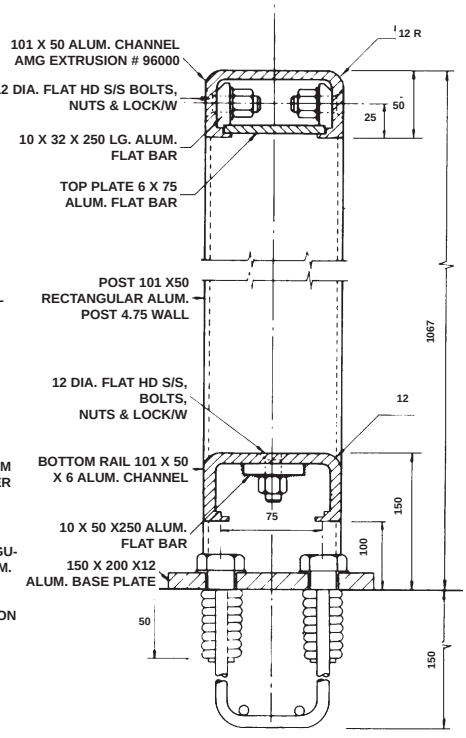

SECTION C-C

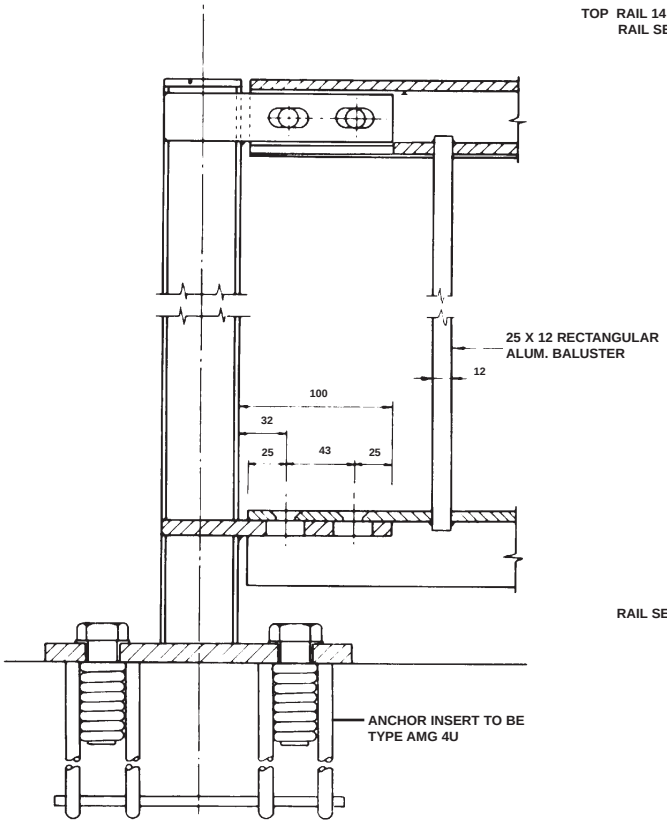

DETAIL AT END POST

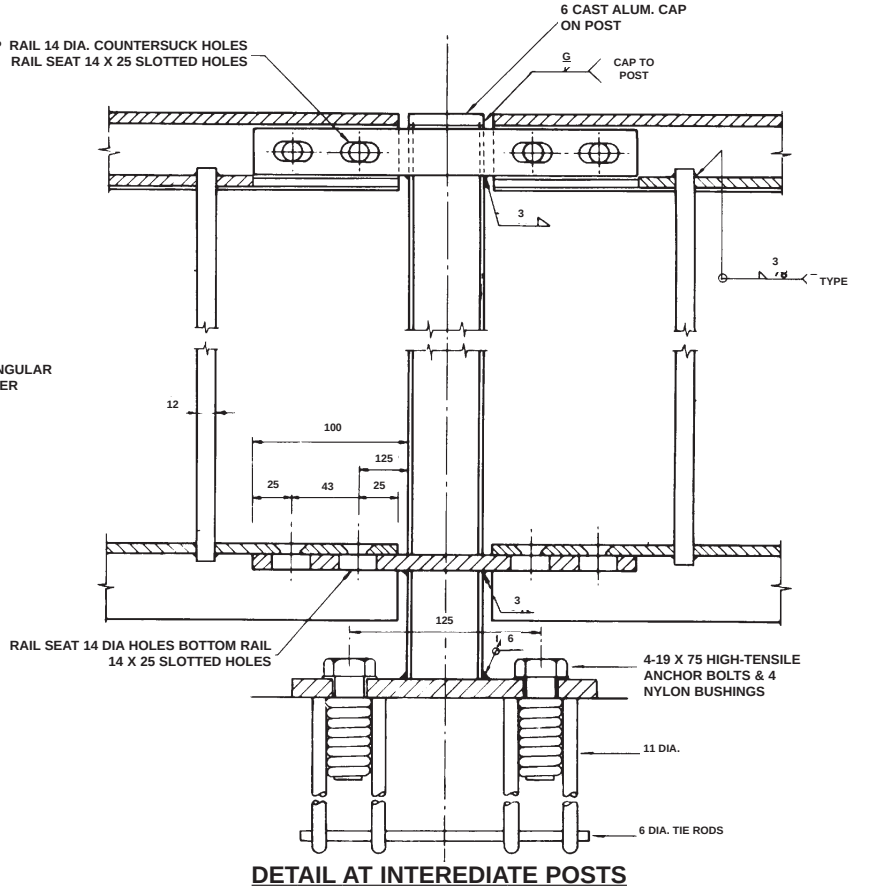

DETAIL AT INTEREDIATE POSTS